nVent HOFFMAN

1	10-32x.25

1-6X

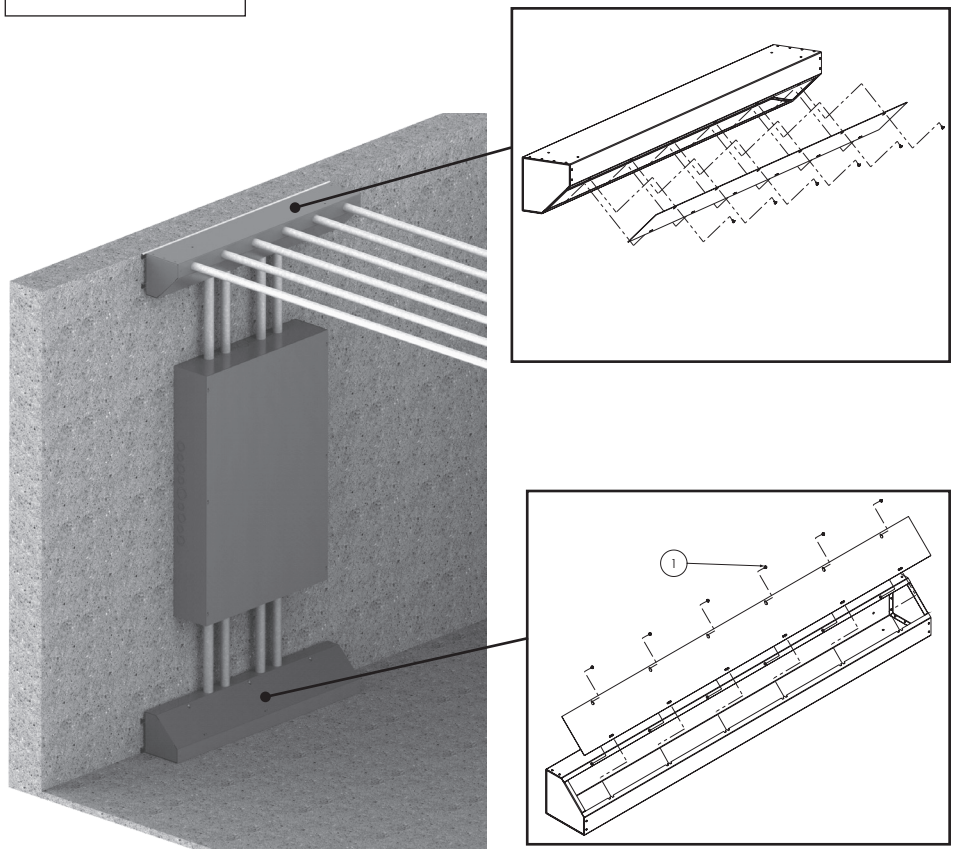

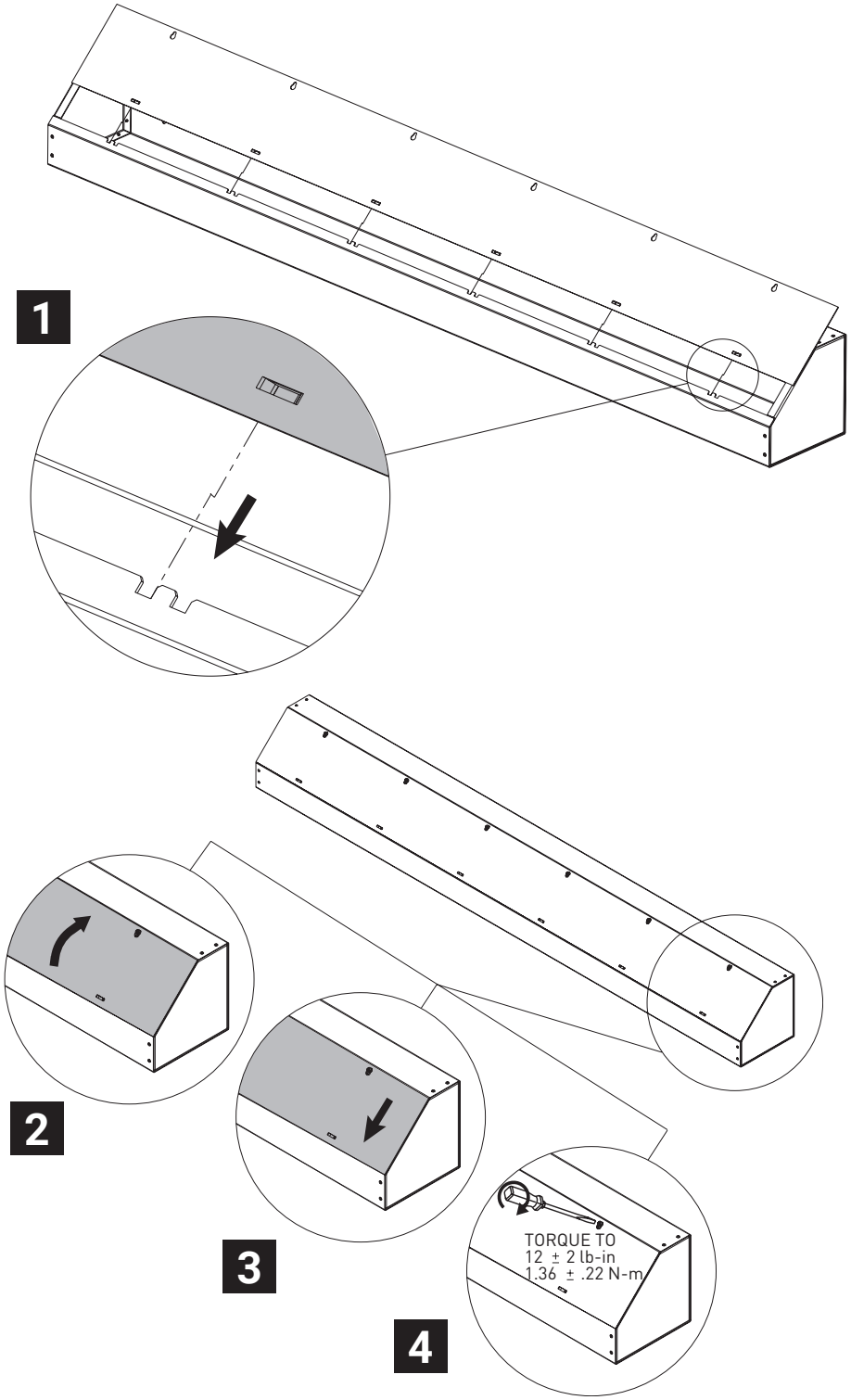

© 2018 Hoffman Enclosures Inc.
PH 763 422 2211 • nVent.com/HOFFMAN
P/N 89159290